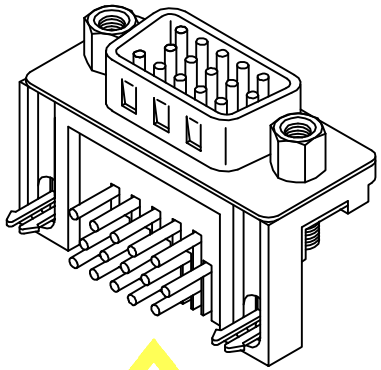

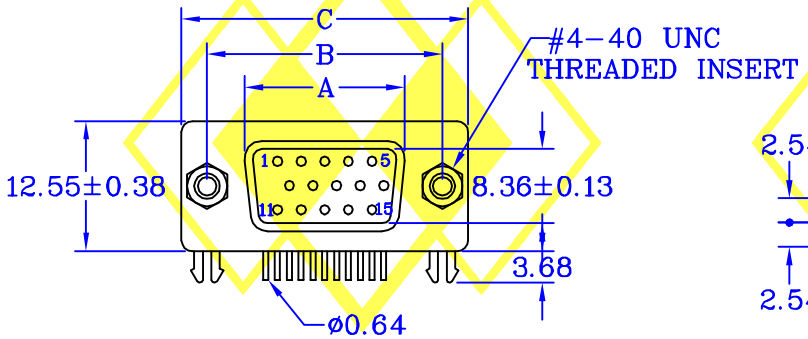

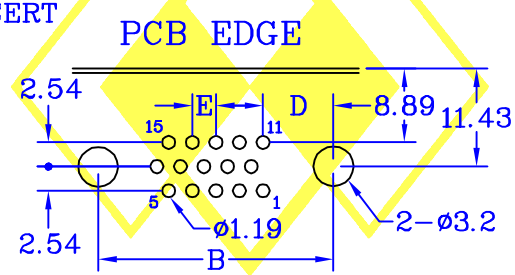

SPECIFICATIONS

ELECTRICAL

- Contact Current Rating : 2 Ampere
- Contact Resistance : 15 mΩ Max
- Insulator Resistance : 1,000 MΩ Min
- Dielectric Withstanding Voltage : 1000 V AC RMS 60 Seconds

MATERIAL

- Insulator : PBT UL94V-0.
- Contact : Brass
- Contact Plated : Gold Plated , Selective Gold Over Nickel
- Shell : Steel
- Shell Plated : Nickel Plated
- Screw : Brass
- Screw Plated : Nickel Plated

Operation Temperature : - 40℃ to + 105℃

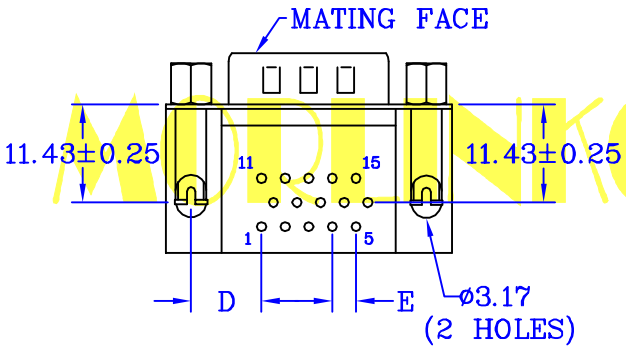

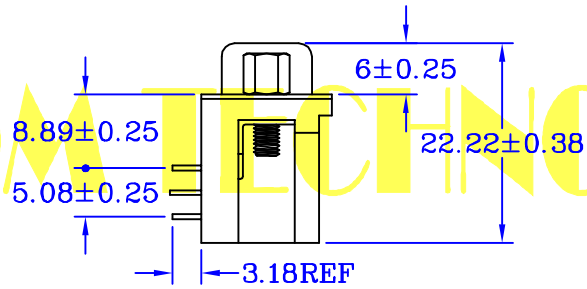

HDRDPXXSB1#3	DIMENSIONS				
CONTACTS	A	B	C	D	E
15	16.92	24.99	30.80	7.04	2.29
26	25.25	33.32	39.25	6.88	2.29
44	38.96	47.04	53.04	6.88	2.29
62	55.42	63.50	69.32	6.99	2.41

UNIT: mm

CENTRONIC PRECISION ELECTRONIC COMPANY
三川精密電子有限公司
MORLINKOM TECHNOLOGY LTD
魔林科技有限公司
TEL:886-2-2686-8788 FAX:886-2-2686-0018
E-MAIL:Centron@tpts6.seed.net.tw E-MAIL:Cen8888@gmail.com

繪圖 DRAWN BY FUFU	日期 DATE 2011/03/29	HDRDPXXSB1#3	圖號 551-XX DRAWING NO.
核對 CHECKED BY WENDY	比例 SCALE 1:1		

PDF created with pdfFactory trial version www.pdffactory.com