ORDERING INFORMATION

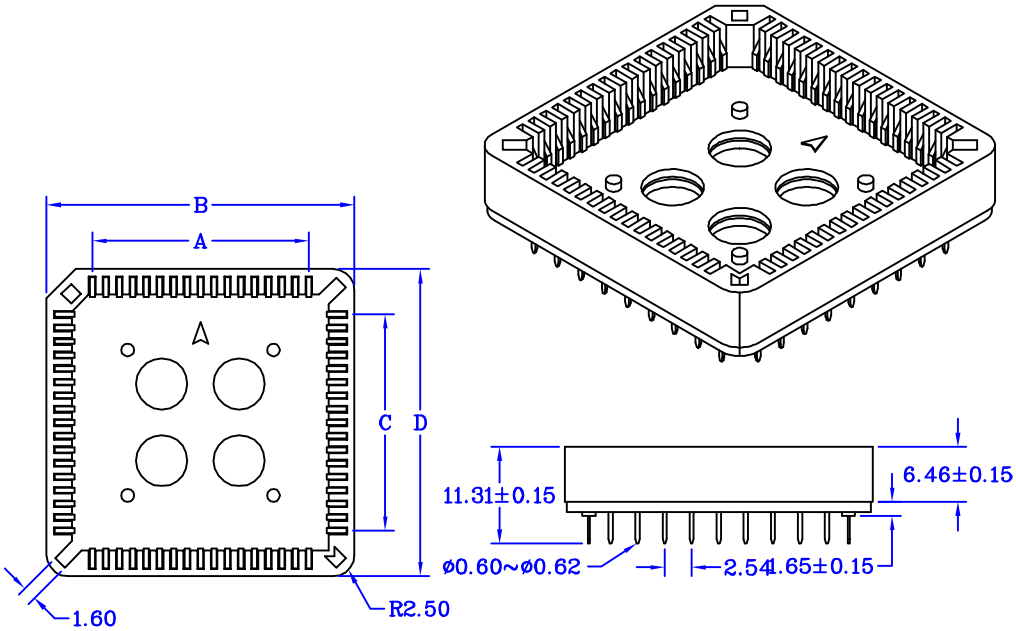

PLADXXTB9A2 PLADXXTB1A1	DIMENSIONS			
CONTACTS	A±0.15	B±0.15	C±0.15	D±0.15
20	5.08	15.50	5.08	15.50
28	7.62	18.04	7.62	18.04
32	7.62	18.04	10.16	20.54
44	12.70	23.48	12.70	23.48
52	15.24	25.88	15.24	25.88
68	20.32	31.04	20.32	31.04
84	25.40	36.04	25.40	36.04

Series	1	2	3	4	5	6	7

Series	PLA : Plcc Chip Carries Sockets
1. Terminal Type	S : SMT Type D : Dip Type
2. Number of Contacts	20 28 32 44 52 68 84
3. Plating Option	T : Tin Plated G : Gold Plated S : Selective Plated
4. Products Logo	A : Custom-Made B : Without Logo (Standard)
5. Plastic Color	1 : Black 9 : Brown
6. Plastic Type	A : Walled B : Slim-Walled
7. Material	1 : Plastic --- PBT 2 : Plastic --- PPS

EXAMPLE : PLA D 84 T B 9 A 2
Plcc Chip Carries Sockets Dip Type 84 Pin
Tin Plated Without Logo Plastic Color Brown
and Walled Material PPS

Morlinkom Technology Ltd.

PDF created with pdfFactory trial version www.pdffactory.com