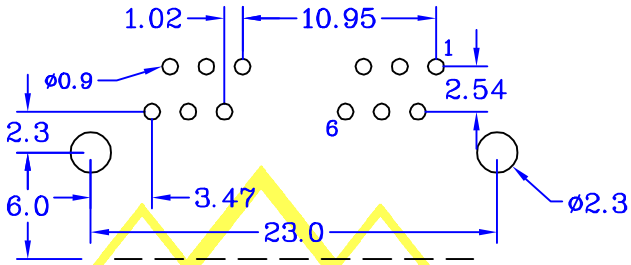

PCB LAYOUT

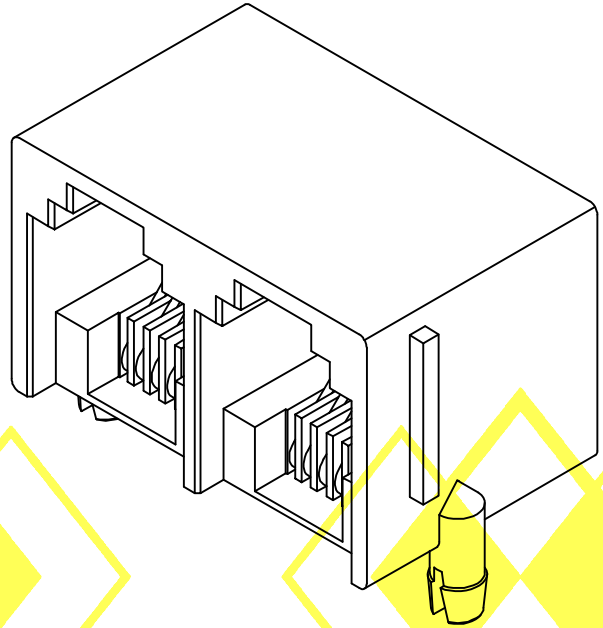

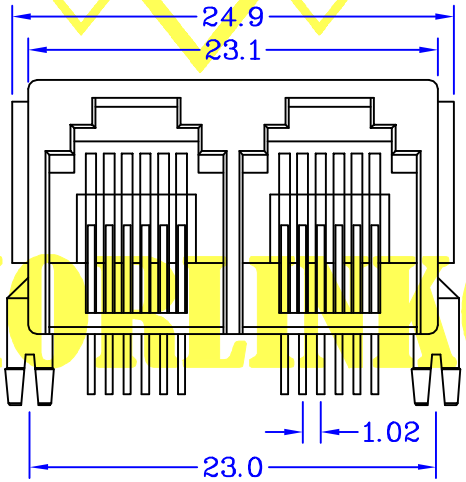

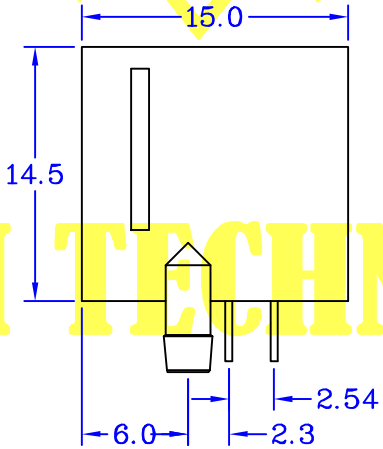

SPECIFICATIONS

ELECTRICAL

- Contact Current Rating : 1 Ampere
- Contact Resistance : 30 mΩ Max
- Insulator Resistance : 500 MΩ Min
- Dielectric Withstanding Voltage : 500 V AC RMS 60 Seconds
- Operating Voltage : 150V AC Max

MATERIAL

- Insulator : Thermoplastic UL94V-0
- Contact : 0.45mm Phospher Bronze Alloy
- Contact Plated : Full Gold Plated

UNIT: mm

MORLINKOM TECHNOLOGY LTD.

CENTRONIC PRECISION ELECTRONIC COMPANY
三川精密電子有限公司
TEL:886-2-2686-8788 FAX:886-2-2686-0018
E-MAIL:Centron@tpts6.seed.net.tw

MORLINKOM TECHNOLOGY LTD
魔林科技有限公司
E-MAIL:Cen8888@gmail.com

繪圖 DRAWN BY FUFU	日期 DATE 2011/03/30	RJ11R6P6C1x2GB1#5	圖號 850-33
核對 CHECKED BY WENDY	比例 SCALE 1:1		DRAWING NO.

PDF created with pdfFactory trial version www.pdffactory.com